MD 63-013RCD

INPUT

63A 3P + N + E / Protection 63A 4P MCB

OUTPUT

2 x SOCA / Protection 2 x 40A 4P RCD , 12 x 16 1P MCB

6 x 16A 2P + E , 1 x SOCA / Protection 1 x 40A 4P RCD , 6 x 16 1P MCB
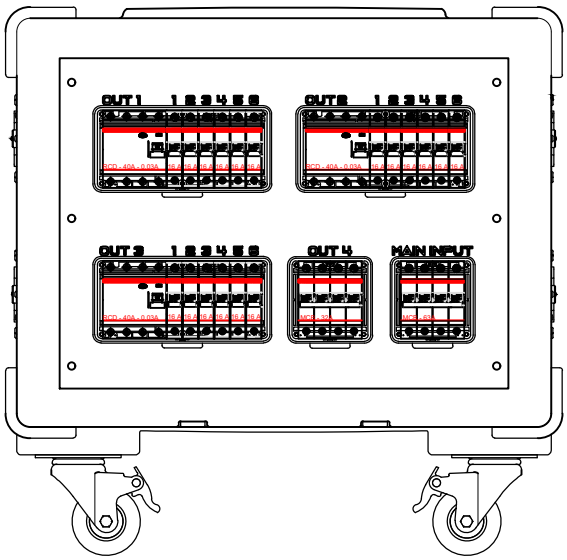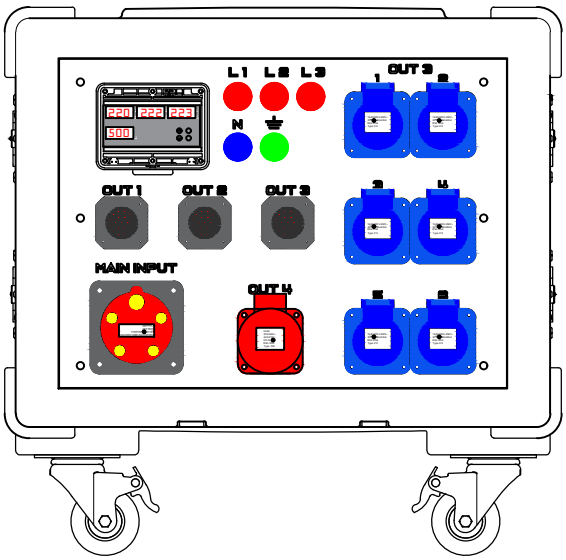
1 x 32A 3P + N + E / Protection , 1 x 32A 4P MCB