J-100
SonicJet Fog Machine
User Manual
- English
-中文

© 2025 Antari Lighting and Effects Ltd.

1. Introduction 1
2. Safety Information 1
3. Package Contents & Inspection 2
4. Machine Details 3
5. Technical Label Information 3
6. Fog Fluid 3
7. Setting and Manual Operation 4
8. Control Settings 4
9. DMX Connection 5
10. RDM Function 6
11. WTR-110 Wireless Remote (Optional) 6
12. EasySwitch W-DMX Receiver (Optional) 7
13. Service and Maintenance 9
14. Technical Specifications 9
15. Warranty Disclaimer 10
16. Machine Dimension 10
1. 前言 11
2. 安全注意事項 11
3. 包裝內容與檢查 12
4. 機器訊息 13
5. 技術標籤資訊 13
6. 煙霧水 14
7. 設定與手動操作說明 14
8. 控制設定 14
9. DMX 說明 15
10. RDM 功能 16
11. WTR-110 無線控制器(選配) 17
12. EasySwitch 無線 DMX 接收器(選配) 18
13. 維護和保養 19
14. 技術規格 19
15. 保固聲明 20
16. 機器尺寸圖 20
Appendix I – Grounding Instruction 21

SONIC J-100 JET

User Manual

1. Introduction

Please read all the user manual before operating the machine, and place the manual where the user can refer to it at all time. The manual includes how to install and operate the machine under safe condition and explain all the labels printed on the machine. If you encounter any problem, contact your local Antari dealer for assistant immediately.

2. Safety Information

DANGER	If the danger is not avoided, it will cause death or serious injury
WARNING	If the warning is not heeded, it can cause death or serious injury.
CAUTION	If the precaution is not taken, it may cause minor or moderate injury.

DANGER

- Must connect the machine to the correct rated voltage or it might lead to an electrical shock or a burn and may cause serious consequences.
- Must connect the machine to a protected circuit and ensure it is properly grounded to avoid the risk of electrocution. For grounding instruction, please refer to Appendix I on page 21.
- Do not operate the machine with a bundled power cord, it could lead to a fire hazard.
- When operating the machine, do not point at people, animals, or fire.

WARNING

- Machine's nozzle is extremely hot, please keep at least 1M distance from the nozzle when the machine is running.
- Please operate the machine on a flat, level hard and well-ventilated surface area, reserve at least 1M space around the machine and make sure there is no flammable gas or material nearby.
- Do not disassemble, repair or modify the machine, it may cause damages, malfunction, risk of electrical shock or result in fire.
- The machine can only be operated by adults or professionals, is not intended for use by person with reduced physical sensory, mental capabilities, or lack of experience and knowledge including children.
- Do not leave the machine running unattended, make sure all powers are off when leaving.
- Children should be supervised to ensure that they do not play with the machine.
- Do not use the machine upside down or tilt it, it might cause damages or malfunction.
- Please store the fluid inside in a well-ventilated area without direct sunlight and keep out of reach of children. In case of eye contact or accidentally swallow the fluid, please seek medical attention immediately.

CAUTION

- Please make sure the power outlet is not damaged or loose before plug in the power cord.
- If the power cord is damaged, it must be replaced by Antari or its local dealers, otherwise the warranty will be void.
- Before operating the machine, please sure the fluid is filled in the fluid tank to avoid the pump in idling state

which could lead to overeat or malfunction.

- Before transporting the machine, please make sure the fluid is drained and tank is empty. (Recommend using original package)
- Do not operate the machine in any area with unstable voltage.
- If you experience strange sound or malfunction, turn off the power and unplug the power cord immediately and contact your local Antari dealer for assistant.
- Do not contact any moving part.
- Only use accessories recommended or sold by Antari.
- Please make sure the power is off when not using the machine and unplug the power cord if not intend to use for a long period of time.
- To disconnect, turn all controls to the off position, then remove plug from outlet.
- Do not unplug by pulling on cord. To unplug, grasp the plug, not the cord.
- Unplug from outlet before servicing or cleaning.
- Do not operate the machine with a damaged cord or plug, or after the machine malfunctions or is dropped or damaged in any manner. Return machine to the nearest authorized service facility for examination, repair, or electrical or mechanical adjustment.
- To ensure the lifespan of the machine, please only use the fluid manufactured by Antari, do not use other fluid or additive, otherwise it may clog the heater and cause malfunction.

Housing Design According to IP33 Level Protection

The International Protection (IP) rating system is commonly expressed as "**IP**" (Ingress Protection) followed by two numbers (i.e. IP33), where the numbers define the degree of protection. The first digit (Foreign Bodies Protection) indicates the extent of protection against particles entering the fixture, and the second digit (Water Protection) indicates the extent of protection against water entering the fixture. An **IP33** rated machine is designed and tested to protect against the ingress of dust (3), and protected against spraying water (3).

NOTE: THE MACHINE IS INTENDED FOR TEMPORARY OUTDOOR USE ONLY!

Before operating the machine, please read all warning labels on the machine, description as below;

Back Cover Printing
WARNING!
DISCONNECT POWER BEFORE CHANGING FUSE
USE ONLY WITH ADULT SUPERVISION
DO NOT OPERATE WITHOUT LIQUID
NO USER SERVICEABLE PARTS INSIDE

LIQUID
ONLY USE MANUFACTURER DESIGNATED FLUID

CAUTION
NEVER ADD FLAMMABLE SUBSTANCES

3. Package Contents & Inspection

3.1 Package Contents

Immediately upon receiving the machine, carefully unpack the carton, check the content to ensure it is the correct model and all parts are included. If any part appears to be damaged or missing during transportation, please contact your local dealer and return in original package for inspection.

1 x J-100 SonicJet Fog Machine
1 x 4 Liter Fluid Tank
1 x Hanging Bracket
1 x Bottle Holder
1 x Power Cable with SEETRONIC IP65 Connector
1 x Quick Start Guide

3.2 Optional Accessories

Item Code	Description
WTR-110 Wireless Remote	W-2 Wireless Transmitter/ EasySwitch Wireless Receiver
ES-W-DMX Receiver	EasySwitch Wireless DMX Receiver

4. Machine Details

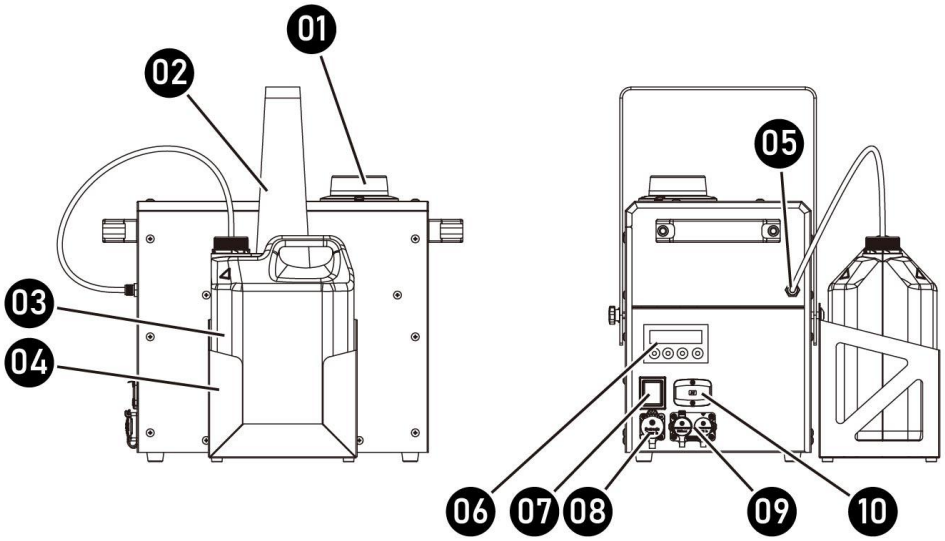

01. Fog Nozzle	06. Onboard Digital Control Interface
02. Hanging Bracket	07. Power Switch
03. 4 Liter Fluid Tank	08. SEETRONICS IP65 Power Connector
04. Bottle Holder	09. XLR 5-Pin IP65 DMX Connector
05. Fluid Connector	10. Expansion Socket

5. Technical Label Information

Please read the technical label information on the back of the machine before operating it.

1. Model Name	5. Breaker/Fuse
2. Input Voltage	6. QR CODE for User Manual
3. Frequency	7. Serial No.
4. Rated Power	

6. Fog Fluid

CAUTION	Always turn off the power before filling the fluid tank. Do not add flammable liquid to the fluid tank. If fluid gets inside the machine, please contact your local Antari dealer for assistant.

- Only the fog fluid manufactured by Antari can be used, do not mix or dilute the fog fluid. Due to improper storage or using other fluid might clog the heater and cause malfunction.
- The machine is tested and calibrated with the specific fog fluid to get the best performance.

- The warranty on your fog machine will be void if you use fog fluid not manufactured by Antari.

7. Setting and Manual Operation

WARNING	Machine falling off might cause serious injury, please make sure it is secure and firm on the overhead.

Step 1. Place the machine on a flat, level hard and well-ventilated surface area and reserve at least 1M open space around the machine, and make sure there is no flammable gas or material nearby;
Step 2. Fill the fluid tank with Antari approved fog fluid, and make sure the tube is not twisted;
Step 3. Connect the machine to the power outlet. Please read the technical label on the back of the machine and make sure the power outlet is the correspond to the rated voltage for the machine;
Step 4. Turn on the machine, warm up process takes approximately 8 minutes. Once the machine has reached operating temperature, the LCD display will show "Ready To Fog". Now the machine is ready for operation;
Step 5. Please read "8. Control Setting" to operate the machine;
Step 6. To turn off the machine, please make sure the machine is not operating then turn of the power. If you will not use the machine a long period of time, please remove the power cord.

8. Control Settings

J-100 SonicJet Fog Machine can be operated in the following modes. The machine can only accept 1 type of signal at a time.

- Manual
- Timer
- DMX512
- Wireless
- W-DMX

8.1 Control Panel Description

J-100 SonicJet Fog Machine can be operated with the onboard digital control interface.

Button	Operating Method	Action
MENU	Press	Enter menu
▲	Press	Up/Increase value
▼	Press	Down/Decrease value
▲ TIMER	Press	Start fogging in TIMER mode according to the set time
▼ VOLUME	Press	Start fogging in VOLUME mode according to the set volume
STOP	Press	1. Leave setting menu 2. Stop fogging 3. Confirm Selection

8.2 Menu Options Description

Options	Description
Timer Output100%	Set Output Volume from 60 - 100% (Timer Mode)
Timer Interval xxx Sec	Set Interval Time from 15 - 360 sec
Timer Duration xxx Sec	Set Duration Time from 1 - 8 sec
Volume Output 100%	Set Output Volume from 60 - 100% (Volume Mode)
Fan Speed 100%	Set Fan Speed from 20 – 100%
DMX512 Add:xxx	Set DMX Address from 001-511
Wireless Function	On / Off
W-DMX	On / Off
Language	EN / 中文
BackLight	On / Auto Off
Keypad Sound	On / Off
Run Last Setting	On / Off
Reset Default	On / Off

9. DMX Connection

9.1 DMX Connector Pin Assignment

This machine has a XLR 5-Pin connector for DMX connection. The diagram below indicates pin assignment information;

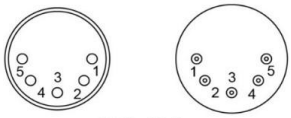

Pin	Function
1	Ground
2	Data-
3	Data+
4	N/A
5	N/A

**There is a protection cap on DMX IN, please remove it with your finger before operation.

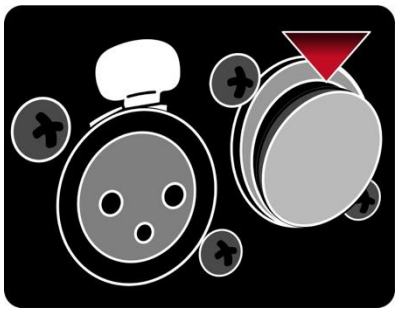

9.2 DMX Channel Function

Mode	Function	Channel	DMX Value Range	Description
2 Channel	Fog Output	1	0 – 152	Off
			153 – 255	Fog Output 60 - 100%
	Fan Speed	2	0 – 50	Off
			51 – 255	Fan Speed 20 – 100%

Noted:

- **CH1 MUST be on in order for CH2 to adjust the fan speed**
- **If CH1 is NOT on, fan speed will stay idle and not adjustable in CH2**

10. RDM Function

The J-100 SonicJet Fog Machine is RDM enabled, allowing control system to configure, mointor and manage. See below table for supported RDM parameters

GET Allowed	SET Allowed	Category	RDM Parameter ID's	Value	Required
		Network Management	DISC_UNIQUE_BRANCH	0x0001	O
			DISC_MUTE	0x0002	O
			DISC_UN_MUTE	0x0003	O
O		RDM Information	SUPPORTED_PARAMETERS	0x0050	O
O		Product Information	DEVICE_INFO	0x0060	O
O			PRODUCT_DETAIL_ID_LIST	0x0070	
O			DEVICE_MODEL_DESCRIPTION	0x0080	
O			MANUFACTURER_LABEL	0x0081	
O	O		DEVICE_LABEL	0x0082	
O			LANGUAGE_CAPABILITIES	0x00A0	
O	O		LANGUAGE	0x00B0	
O			SOFTWARE_VERSION_LABEL	0x00C0	O
O	O	DMX512 Setup	DMX_PERSONALITY	0x00E0	
O			DMX_PERSONALITY_DESCRIPTION	0x00E1	
O	O		DMX_START_ADDRESS	0x00F0	O
O			SLOT_INFO	0x0120	
O			SLOT_DESCRIPTION	0x0121	
O			DEFAULT_SLOT_VALUE	0x0122	
O		Sensors	SENSOR_DEFINITION	0x0200	
O	O		SENSOR_VALUE	0x0201	
O		Control	DEVICE_HOURS	0x0400	
O	O		IDENTIFY_DEVICE	0x1000	O

11. WTR-110 Wireless Remote (Optional)

WTR-110 Wireless Remote is an optional accessory for J-100 SonicJet Fog Machine, it included a W-2 wireless transmitter and an EasySwitch Wireless Receiver. If you already purchased the wireless model, it's ready to use. If you purchase afterwards, please follow the instruction below. If you encounter any problem, please contact your local Antari dealer for assistant.

11.1 W-2 Wireless Transmitter & EasySwitch Wireless Receiver

- Battery：27A 12V
- Effective Range：The effective range is approximately 50 meter, depends on actual condition, it may vary.
- If effective range is significantly shorter, please change battery.
- W-2 wireless transmitter has 4 buttons, each function as follow:

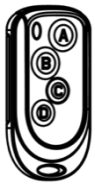

W-2 Wireless Transmitter

Button	Function
[A]	Start
[B]	Stop
[C]	Increase Fog Output
[D]	Decrease Fog Output

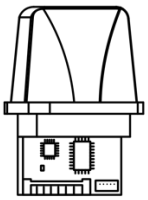
EasySwitch Wireless Receiver

11.2 EasySwitch Wireless Receiver Installation

Please follow the instructions below to install the receiver.

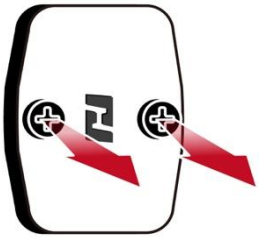
Graph 1

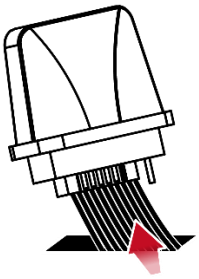
Graph 2

Graph 3

1. Please see graph 1, remove the screw from the pointed place and pull the cover;
2. You will see a white cable like graph 2, pull it out and connect to the EasySwitch wireless receiver;
3. Screw it back to the machine show in graph 3 and follow the instruction on 11.3 for pairing.

11.3 Pair & Unpair

Each receiver can pair up to 5 transmitters, please follow the steps below to pair or unpair the transmitter;

Step 1. Press [MENU] to enter menu, select [Wireless Function], press [UP] to choose [On] to turn on Wireless Function;
Step 2. Press [MENU] to enter menu, select [Wireless], press [UP] to choose [Pair] and press [STOP];
Step 3. When screen show Press [A], then press [A] on the W-2 wireless transmitter to pair;
Step 4. When screen show [Pair Completed], then it's successful;
Step 5. If you want to pair multiple transmitters, repeat Step 1 – 4;
Step 6. To unpair, press [MENU] to enter menu, select [Wireless], press [UP] to choose [Unpair] and press [STOP];
Step 7. When screen show [Unpair Completed], then it's successful
Note: Wireless function will ONLY appear in the menu when you connect the EasySwitch Wireless Receiver to the machine and screen will show [W]

12. EasySwitch W-DMX Receiver (Optional)

EasySwitch W-DMX Receiver is an optional accessory for J-100 SonicJet Fog Machine, it included a EasySwitch W-DMX receiver. If you already purchased the W-DMX model, it's ready to use. If you purchase afterwards, please follow the instruction below. If you encounter any problem, please contact your local Antari dealer for assistant.

12.1 EasySwitch W-DMX Receiver

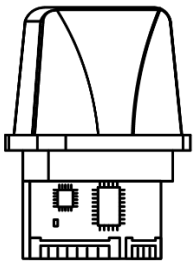

12.2 EasySwitch W-DMX Receiver Installation

Please follow the instructions below to install the receiver.

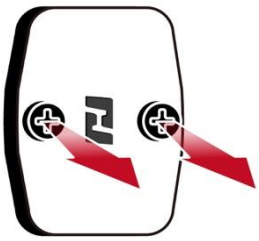

Graph 1

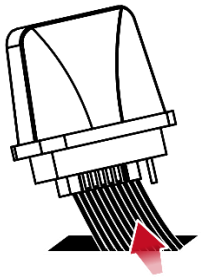

Graph 2

Graph 3

1. Please see graph 1, remove the screw from the pointed place and pull the cover;
2. You will see a white cable like graph 2, pull it out and connect to the EasySwitch wireless receiver;
3. Screw it back to the machine like graph 3 and follow the instruction on 12.3 for pairing.

12.3 Pair & Unpair

Please follow the steps below to link or unlink W-DMX signal;

Step 1. Press [MENU] to enter the menu, select [W-DMX] and Press [UP] to choose [On] to turn on W-DMX function, and you can see status on the screen

Step 2. It will automatically search for signal and pair;

Step 3. To unpair, press [MENU] to enter the menu, select [W-DMX Unpair] and press [UP] to choose [Yes], then press [STOP] to proceed;

Step 4. When show [Unpair Completed], it's successful

Note: W-DMX function will ONLY appear in the menu when you connect the EasySwitch W-DMX Receiver to the machine and screen will show [W]

12.4 Status of W-DMX

Signal on LCD Display	Wireless DMX Status
○	Transmitter not assigned
⊙	Transmitter assigned, no DMX signal
◎	Transmitter link lost or linking to transmitter
●	Transmitter assigned, DMX signal received

13. Service and Maintenance

DANGER	Disconnect the power cord before starting maintenance operation

- Always keep the machine clean.
- Can use air compressor, vacuum or a soft brush to remove the dust on the machine.
- Can use a slightly damp cloth to clean the casing.
- Before store the machine, please make sure the machine is completely cool down to avoid moisture inside causing malfunction.
- It is recommended to run the machine at least once a month in order to maintain the machine's best performance and output condition.
- Excessive dust and build up liquid residue will reduce the performance and cause overheat.

13.1 Breaker Reset

Please follow the instructions below to reset the breaker;
Step 1. Disconnect AC power
Step 2. Reset the breaker
Step 3. Turn on machine for testing
**If the breaker still jumps off after reset, please contact your local Antari dealer for assistance.

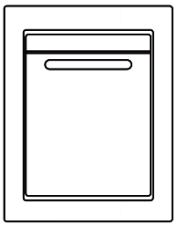

Breaker Specification
15A 250V

14. Technical Specifications

	J-100
Input Voltage	EU Model: AC 220-240V, 50/60Hz 11.5A
Rated Power	2700W
Warming-up Time	8 minutes (approx.)
Fluid Consumption	250 ml/min (100% output)
Fluid Tank Capacity	4 Liters (1.06 Gallon)
Compatible Fluid	FLK High Density Fast Dissipating Fog Fluid
Ambient Temp. Range	0°C – 40°C (32°F – 104°F)
Control Methods	Manual、Timer、DMX512、Wireless (Optional)、W-DMX (Optional)
Interface	SEETRONIC IP65 XLR 5-Pin Connector (DMX)、SEETRONIC IP65 Connector (Power)
DMX Channels	2 Channel
Included Accessories	Hanging Bracket、Bottle Holder
Optional Accessories	WTR-110 Wireless Remote、ES-W-DMX Receiver
Dimension	L 424 W 389 H 440 mm (L 16.69 W 15.31 H 17.32 inch)
Weight	18.7 kg (41.23 lbs.)

15. Warranty Disclaimer

We guarantee the merchandise manufactured by us to be free from defect in material and workmanship for a period of one year. Our obligation and liability under this warranty shall be restricted to repair or replacement at our factory or local authorized dealer. We assume no liability of the products that are improperly used or used for any purpose other than that for which they are specially designed. This warranty shall not apply to any merchandise which has been repaired, altered or assembled outside our factory in any way so as in our judgment to affect its performance, nor which has been subjected to misuse, negligence, or accident nor to any merchandise operated contrary to our printed instructions. We will not allow or be liable of any loss or any damages of any kind in connection with the use, sale, or repair of any merchandise purchased from us.

16. Machine Dimension

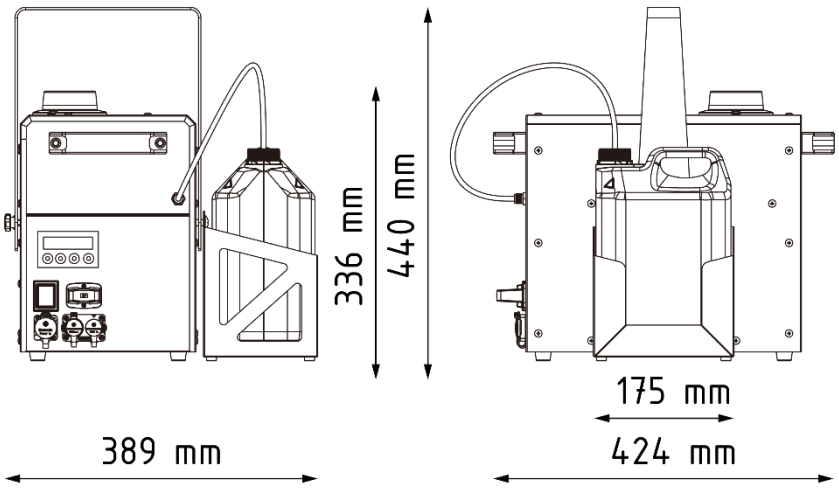

中文使用說明書

1. 前言

在操作本機器之前，請務必仔細詳閱本說明書然後請將本說明書放置在機器使用者可隨時查閱之處存放。此說明書包含如何安全的安裝及操作本機器以及說明所有在機器上的標示。如果您有任何操作上的問題，請立即聯繫當地的 Antari 經銷商尋求協助。

2. 安全注意事項

危險	若不確實避免這些指示，可能導致嚴重人身傷害甚至死亡。
警告	若不確實遵循這些指示，可能導致嚴重人身傷害甚至死亡。
注意	若不確實注意這些指示，可能導致人身傷害甚至死亡，嚴重程度視情況而定。

危險

- 請務必使用正確電壓。如果使用錯誤電壓，可能會遭受危險的電擊燒傷或更嚴重的後果。
- 請務必將機器連結到有保護的電路，並確保有正確的接地，以避免觸電的危險。關於接地方式請參考第 21 頁附錄 I。
- 請勿在捆綁電源線的情況下使用，可能會發熱導致火災。
- 操作機器時請勿將機器對著人體、動物或火焰使用。

警告

- 機器的噴嘴非常燙。當機器工作時，請遠離噴嘴 1 公尺以上。
- 請於堅固、平坦、穩定且通風良好的表面上使用機器。請勿遮蓋機器散熱部份，機器周邊至少應保留 1 公尺的空間並確認附近沒有易燃性物質或可揮發性氣體。
- 請勿隨意拆卸、修理或改造機器，這可能會導致機器故障、損壞、觸電危險或造成火災。
- 本機器僅限有行為能力之成人或專業人員操作，不預期提供生理、感知、心智能力、經驗或知識不足者之使用者(包含孩童)使用本機器。
- 請勿在無人看管時讓機器運作，並於外出離去時確實關閉電源。
- 孩童應受監督，以確保孩童不能操作或嬉戲玩本機器。
- 請勿將機器倒放或傾斜使用，可能導致機器動作不正常或損壞。
- 請將液體存放在室內孩童無法取得之處，保持通風及避免陽光直射。如果有觸碰眼睛或誤食，請立即尋求醫生的協助。

注意

- 在插入電源插座前，請確認電源插座無損壞或鬆動。
- 若電源線損壞，必須使用原廠電源線或組件進行更換，否則將導致保固無效。
- 請在使用機器之前，先填裝好煙霧水，避免機器幫浦空轉過熱造成損害。機器在搬運前或使用完畢後，請清空油桶。

- 在運輸本機器前，請確認機器的油箱已清空並且包裝完整。(建議使用原廠包裝)
- 請勿在電壓不穩定的地區使用本機器。
- 如果機器出現異常聲音或有任何不正常現象時，請立即停止工作，將電源關閉及拔下機器電源線，並請聯繫當地的 Antari 經銷商尋求協助。
- 請勿觸碰機器內部運轉零件。
- 只能使用原廠建議或販售之配件。
- 請確認機器不在使用的狀態下電源已關。如果長時間不使用機器，請拔掉電源線。
- 關閉機器時，將控制開關轉到關閉的位置，然後再將插頭從插座拔除。
- 拔除電源線時，請抓住插頭不是電線。
- 在保養及清潔前，請把電源線從插座拔除。
- 在電線或插座有損毀、機器故障或有掉落或損壞的情形發生時，請勿操作機器。請將機器送回最近的維修站，做檢查、維修及電源或機械的調整。
- 為確保機器的使用壽命，請使用 Antari 原廠製造之煙霧水，勿使用其它非 Antari 原廠製造煙霧水或添加劑，否則可能會導致電熱管阻塞和故障。

機殼設計符合 IP33 防護等級

國際防護（IP）等級系統通常表示為「IP」(防護等級)，後面跟隨兩個數字（例如 IP33)，這些數字定義了防護程度。第一個數字（防異物保護）表示對進入設備的顆粒的防護程度，第二個數字（水防護）表示對水進入設備的防護程度。IP33 防護等級的機器經過設計和測試，可防止灰塵（3）的進入，並能承受噴水（3)。

注意：此機器僅適用於暫時戶外使用！

在使用本機之前，請詳細閱讀機器上的警語標示，說明如下：

Back Cover Printing

WARNING! 警告!

DISCONNECT POWER BEFORE CHANGING FUSE. 更換保險絲前請務必斷開電源

USE ONLY WITH ADULT SUPERVISION. 僅在成人監督下使用

DO NOT OPERATE WITHOUT LIQUID. 請勿在沒有液體的情況操作本機台

NO USER SERVICEABLE PARTS INSIDE. 內部無使用者可維修之零配件

LIQUID 液體

ONLY USE MANUFACTURER DESIGNATED FLUID 僅使用製造商指定的液體

CAUTION 注意

NEVER ADD FLAMMABLE SUBSTANCES 請勿添加易燃物質

3. 包裝內容與檢查

在收到機器後，請立即小心地打開包裝紙箱，檢查所有內容，確認您所購買的機型及配件。如果有任何部件因運輸過程出現損壞或缺少，請立即連絡經銷商，並以原包裝退回檢查。

3.1 包裝內容

1 x J-100 噴射氣柱煙霧機
1 x 4 公升油桶
1 x 吊架
1 x 油桶座
1 x SEETRONICS IP65 連接頭電源線
1 x 快速入門指南

3.2 選配說明

品項	描述
WTR-110 無線控制器	W-2 無線發射器/EasySwitch 無線接收器
ES-W-DMX 接收器	EasySwitch 無線 DMX 接收器

4. 機器訊息

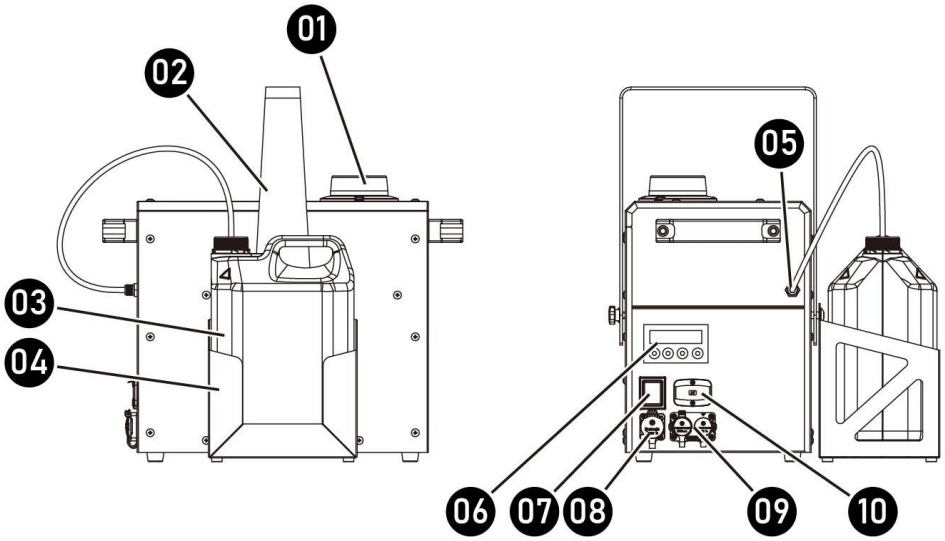

01. 噴煙口	06. 數位控制面板
02. 吊架	07. 電源開關
03. 4 公升油桶	08. IP65 電源連接頭
04. 油桶座	09. IP65 XLR 5-Pin 連接頭(DMX)
05. 液體連接頭	10. 擴充槽

5. 技術標籤資訊

使用本機器前，請詳閱技術標籤上的訊息

1. 機器型號	5. 斷路器/保險絲
2. 工作電壓	6. 說明書 QR CODE
3. 頻率	7. 機器流水序號
4. 瓦特數	

6. 煙霧水

危險	將液體加入機器之前，請務必先拔除電源線。請勿添加易燃液體。如果發現液體流入機器內部，請洽 Antari 原廠或其經銷商尋求協助。

- 僅能使用 Antari 原廠製造之煙霧水，不可混用或稀釋。若因保存不當而變質或使用非原廠煙霧水，將可能造成電熱管堵塞而導致機器故障。
- 本機器是使用專屬的煙霧水做測試與校正來取得最佳的效能。
- 如果使用非原廠製造之煙霧水或香精而導致煙霧機損壞將不在保固範圍內。

7. 設定與手動操作說明

警告	機台掉落可能會造成嚴重傷害，請確保本機台安裝牢固且不會掉落。

步驟1. 將機器平放在堅固、平坦、穩定且通風良好的表面上，機器周圍至少應保留 1 公尺的空間並確認附近沒有易燃性物質或可揮發性氣體;

步驟2. 使用 ANTARI 原廠專用煙霧水注入機器所附的油桶，並注意不要折到油管;

步驟3. 將機器連接電源，連接之前，確認機器背後技術標籤上所標示要求功率，是否與電源插座相符;

步驟4. 啟動機器電源後，使機器開始加熱。機器加熱到可工作溫度大約需要 8 分鐘。當機器達到工作溫度時，螢幕會顯示“Ready to Fog”，表示機器已經準備好可進行操作;

步驟5. 機器相關操作方式，請參照”8. 控制設定”;

步驟6. 需關閉本機時，請確認機器已停止運轉，再將電源開關關閉即可，長時間不使用時請移除電源線。

8. 控制設定

J-100 噴射氣柱煙霧機可以使用下列操作模式，機器每次接受一種訊號。

- 手動控制
- 定時控制
- DMX512
- 無線控制
- 無線 DMX

8.1 控制面板說明

J-100 噴射氣柱煙霧機可以使用機器上的數位控制面板來操作。

按鈕	操作方式	動作
MENU	按	進入設置選單
▲	按	上/增加數值
▼	按	下/減少數值
TIMER ▲	按	按一下根據設定時間啟動噴煙
VOLUME ▼	按	按一下根據設定輸出量啟動噴煙
STOP	按	1. 離開設置選單 2. 停止噴煙 3. 確認選項

8.2 選單說明

選項	設定值
Timer Output 100% 定時輸出量	設定輸出量 60 – 100% (定時模式)
Timer Interval xxx Sec 間隔時間	設定時間間隔 15 – 360 秒
Timer Duration xxx Sec 啟動時間	設定輸出時間 1 – 8 秒
Volume Output 100% 手動輸出量	設定輸出量 60 – 100% (手動模式)
Fan Speed 100% 風扇速度	設定風扇速度 20 – 100%
DMX512 Add:xxx DMX 通道: xxx	設定 DMX 地址: 001-511
Wireless 無線控制功能	開 / 關
無線 DMX 功能	開 / 關
語言設定	EN / 中文
亮度設定	開 / 自動關閉
按鍵聲設定	開 / 關
快速啟動	開 / 關
恢復預設值	開 / 關

9. DMX 說明

9.1 DMX 說明

本機提供 5-PIN 的 DMX 連接頭。PIN 的接點說明如下;

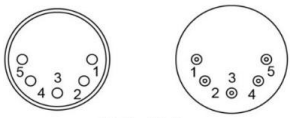

Pin	功能
1	接地
2	數據-
3	數據+
4	NA
5	NA

**DMX IN 連接頭上有一個保護蓋，操作前，請用手指撥開即可將其取下。

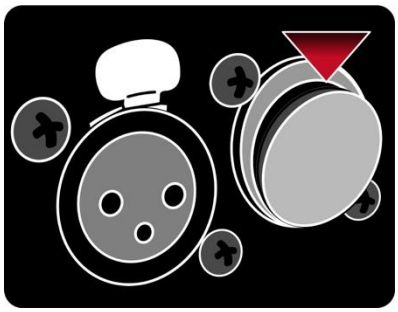

9.2 DMX 通道功能

模式	功能	通道	DMX 數值	說明
2 通道	煙霧輸出量	1	0 – 152	關閉
			153 – 255	煙霧輸出 60 - 100%
	風扇速度	2	0 – 50	關閉
			51 – 255	風扇速度 20 – 100%

注意事項：

- **必須開啟 CH1，CH2 才能調整風扇速度**
- **若 CH1 未開啟，風扇將維持待機狀態，CH2 無法調整風扇速度**

10. RDM 功能

J-100 噴射氣柱煙霧機配有 RDM 功能，讓使用者可以經由 DMX 網路使用 RDM 功能進行機台設定、監控、管理。

GET Allowed	SET Allowed	Category	RDM Parameter ID's	Value	Required
		Network Management 網路管理	DISC_UNIQUE_BRANCH	0x0001	O
			DISC_MUTE	0x0002	O
			DISC_UN_MUTE	0x0003	O
O		RDM Information RDM 資訊	SUPPORTED_PARAMETERS	0x0050	O
O		Product Information 產品資訊	DEVICE_INFO	0x0060	O
O			PRODUCT_DETAIL_ID_LIST	0x0070	
O			DEVICE_MODEL_DESCRIPTION	0x0080	
O			MANUFACTURER_LABEL	0x0081	
O	O		DEVICE_LABEL	0x0082	
O			LANGUAGE_CAPABILITIES	0x00A0	
O	O		LANGUAGE	0x00B0	
O			SOFTWARE_VERSION_LABEL	0x00C0	O
O	O	DMX512 Setup DMX512 設定	DMX_PERSONALITY	0x00E0	
O			DMX_PERSONALITY_DESCRIPTION	0x00E1	
O	O		DMX_START_ADDRESS	0x00F0	O
O			SLOT_INFO	0x0120	
O			SLOT_DESCRIPTION	0x0121	
O			DEFAULT_SLOT_VALUE	0x0122	

GET Allowed	SET Allowed	Category	RDM Parameter ID's	Value	Required
O		Sensors 感應器	SENSOR_DEFINITION	0x0200	
O	O		SENSOR_VALUE	0x0201	
O		Control 控制	DEVICE_HOURS	0x0400	
O	O		IDENTIFY_DEVICE	0x1000	O

11. WTR-110 無線控制器(選配)

WTR-110 無線控制器是 J-100 噴射氣柱煙霧機的選購配件，包含一個 W-2 無線發射器及 EasySwitch 無線接收器。若您採購的版本已含無線功能，即已安裝至機器上，可直接使用。若是後續採購，請按照下方說明進行安裝與配對。如果遇到任何困難與問題，請與當地的 Antari 經銷商尋求協助。

11.1 W-2 無線發射器 & EasySwitch 無線接收器

- 發射器：使用 27A 12V 電池
- 收發距離：有效距離為 50 公尺，實際收訊狀況根據現場環境因素而有所不同。
- 如果發現有效距離明顯減少時，請更換電池。
- W-2 無線發射器配有 4 個按鈕，控制功能為：

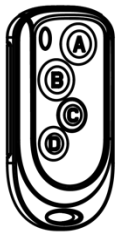

W-2 無線發射器

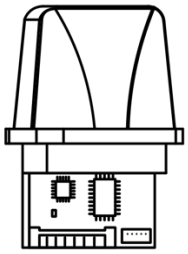

EasySwitch 無線接收器

按鈕	功能
[A] 鍵	啓動
[B] 鍵	關閉
[C] 鍵	增加煙霧輸出量
[D] 鍵	減少煙霧輸出量

11.2 EasySwitch 無線接收器安裝說明

請按照下方說明進行安裝與配對。

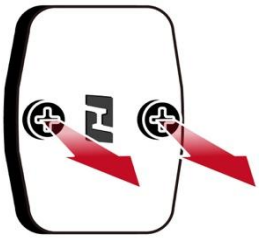

圖 1

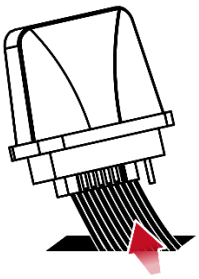

圖 2

圖 3

1. 請看圖一，鬆開螺絲並取下蓋子;
2. 請看圖二，你會看到一條白色的線，請拉出來，接在 EasySwitch 無線接收器上;
3. 請看圖三，將接收器鎖回去原本的地方，然後按照 11.3 的步驟開始配對。

11.3 配對 & 取消配對

每個接收器可以配對最多 5 個控制器，請參考下面步驟配對和取消配對控制器。

步驟 1：按下[MENU]進入選單，選擇[無線控制功能]，按下[UP]選擇[開]，開啟無線功能;
步驟 2：再按下[MENU]進入選單，選擇[無線控制]，按下[UP]選擇[配對]，再按下[STOP];
步驟 3：當螢幕顯示按下[A]鍵，立即按下 W-2 發射器上的[A]鍵，進行配對;
步驟 4：當螢幕顯示[配對完成]，代表配對成功;
步驟 5：如果想要配對多個發射器，請重複步驟 1 - 4
步驟 6：欲取消配對，按下[MENU]進入選單, 選擇[無線控制], 按下[UP]選擇[取消配對]，再按下[STOP];
步驟 7：當螢幕顯示[取消配對完成]，代表取消配對完成;
注意: 當無線接收器安裝在機器上時，螢幕上會顯示[W]，無線功能才會顯示在[MENU]中。

12. EasySwitch 無線 DMX 接收器(選配)

EasySwitch 無線 DMX 接收器是 J-100 噴射氣柱煙霧機的選購配件，包含一個無線 DMX 接收器。若您採購的機型包含此功能，即已安裝至機器上，可直接使用。若是後續採購，請按照下方說明進行安裝與配對。如果遇到任何困難與問題，請與當地的 Antari 經銷商尋求協助。

12.1 無線 DMX 接收器

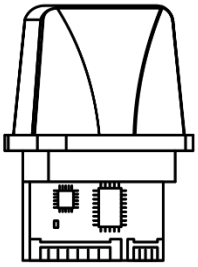

12.2 無線 DMX 接收器安裝說明

請按照下方說明進行安裝與配對。

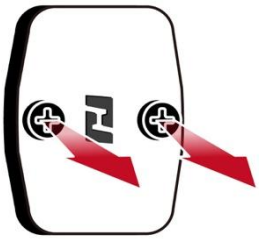

圖 1

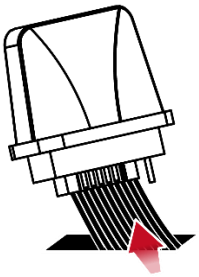

圖 2

圖 3

1. 請看圖一，鬆開螺絲並取下蓋子;
2. 請看圖二，取下後，你會看到一條白色的線，請拉出來接在 EasySwitch 無線 DMX 接收器上;
3. 請看圖三，將接收器鎖回去原本的地方，然後按照 12.3 的步驟開始配對。

12.3 配對 & 取消配對

請參考下面步驟鏈接無線 DMX 訊號;

步驟 1：按下[MENU]進入選單，選擇[無線 DMX]，然後選擇[開]，按下[STOP]，然後就可以在螢幕看到目前狀態;
步驟 2：接收器會自動搜尋及連接訊號;
步驟 3：欲取消配對，按下[MENU] ，選擇[無線 DMX 刪除配對] ，按下[UP] ，選擇[開] ，按下[STOP]進行解除配對;
步驟 4：待畫面顯示[刪除配對完成]，即完成取消配對;
注意: 當無線 DMX 接收器安裝在機器上時，螢幕上會顯示[P]，無線 DMX 功能才會顯示在[MENU]中。

12.4 連接狀態說明

LCD 螢幕上所顯示的符號	無線 DMX 連結狀態
○	沒有對頻任何無線 DMX 發射器
⊙	無線 DMX 發射器已對頻，但沒有 DMX 訊號
◎	無線 DMX 發射器連接遺失 / 正在與發射器連接
●	無線 DMX 發射器已對頻，接收到 DMX 訊號

13. 維護和保養

危險	維修保養之前，請務必拔除電源線

- 隨時保持機器清潔。
- 可以使用空氣壓縮機、吸塵器或軟刷除去機器上的灰塵。
- 機殼可使用濕布擦拭。
- 在存放或收起機器前，請確認機器完全冷卻，避免機器內部潮濕導致故障。
- 建議每月至少讓機器運轉一次，以保持機器處於最佳的性能和輸出條件。
- 機器上過多的灰塵、液體殘餘累積的髒污會降低機器工作性能，導致散熱不良。

13.1 重置斷路器

請根據下列步驟，重置電流斷路器。

步驟1. 關閉機器電源
步驟2. 將電流斷路器復歸
步驟3. 重新開啟機器測試
**如果遇到任何困難與問題，請與當地的 Antari 經銷商尋求協助。

電流斷路器規格
15A 250V

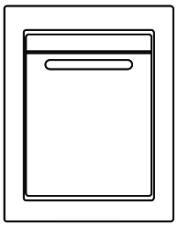

14. 技術規格

	J-100
電壓	歐規 : AC 220-240V, 50/60Hz 11.5A
額定功率	2700 瓦
加熱時間	約 8 分鐘
耗油量	250 毫升/分鐘 (100%輸出)
油桶容量	4 公升 (1.06 加侖)
適用煙霧水	FLK 高濃度快速消散煙霧水
適用環境溫度	0°C – 40°C (32°F – 104°F)
控制方式	手動控制、定時控制、DMX 512、無線控制(選配)、無線 DMX(選配)
DMX 512 通道	2 個頻道

	J-100
連接座	SEETRONIC IP65 XLR 5-Pin 連接頭(DMX)、SEETRONIC IP65 連接頭(主電源)
隨附配件	吊架、油桶座
選購配件	WTR-110 無線控制器、ES-W-DMX 接收器
尺寸	長 424 寬 389 高 440 公釐 (長 16.69 寬 15.31 高 17.32 英寸)
重量	18.7 公斤 (41.23 磅)

15. 保固聲明

本公司保證我們的商品在一年內沒有材料和製作缺陷。我們在本保證下的義務和責任僅限於在原廠或當地授權經銷商進行的維修或更換。我們對不當使用或用於非專門設計目的以外之用途不承擔任何責任。本保固不適用於以任何方式在原廠或當地授權經銷商外修理、改動或組裝的任何商品，以便我們判斷影響其性能，沒有受到誤用、疏忽或事故的影響，也沒有違反我們的任何商品操作印刷說明。本公司對於從我們這邊購買的商品不會允許也不對於使用、銷售或修理任何產品有關的任何類型的任何損失或損害承擔責任。

16. 機器尺寸圖

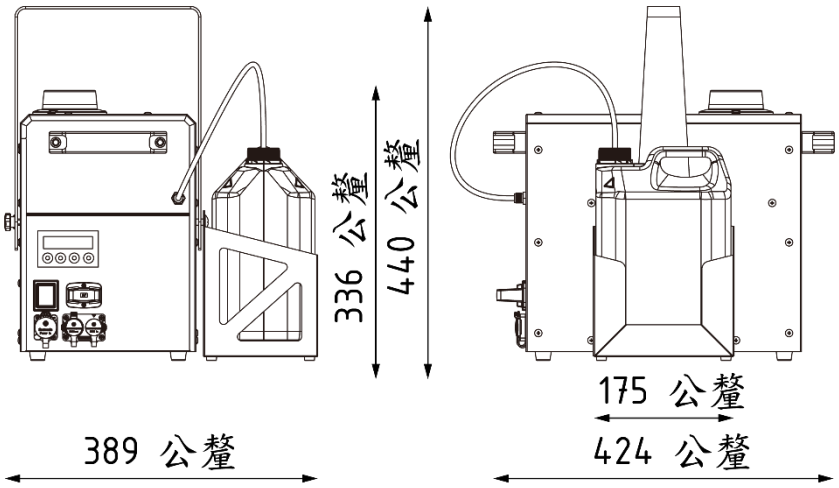

Appendix I – Grounding Instruction

This appliance must be grounded. In the event of malfunction or breakdown, grounding provides a path of least resistance for electric current to reduce the risk of electric shock. This appliance is equipped with a cord having an equipment-grounding conductor and a grounding plug. The plug must be plugged into an appropriate outlet that is properly installed and grounded in accordance with all local codes and ordinances.

DANGER – Improper connection of the equipment-grounding conductor can result in a risk of electric shock. The conductor with insulation having an outer surface that is green with or without yellow stripes is the equipment-grounding conductor. If repair or replacement of the cord or plug is necessary, do not connect the equipment-grounding conductor to a live terminal. Check with a qualified electrician or serviceman if the grounding instructions are not completely understood, or if in doubt as to whether the appliance is properly grounded. Do not modify the plug provided with the appliance – if it will not fit the outlet, have a proper outlet installed by a qualified electrician.

This appliance is for use on a nominal 120V circuit, and has a grounding plug that looks like the plug illustrated in sketch A in Figure. A temporary adaptor, which looks like the adaptor illustrated in sketches B and C, may be used to connect this plug to a 2-pole receptacle as shown in sketch B if a properly grounded outlet is not available. The temporary adaptor should be used only until a properly grounded outlet can be installed by a qualified electrician. The green colored rigid ear, lug, and the like, extending from the adaptor must be connected to a permanent ground such as a properly grounded outlet box cover. Whenever the adaptor is used, it must be held in place by the metal screw.

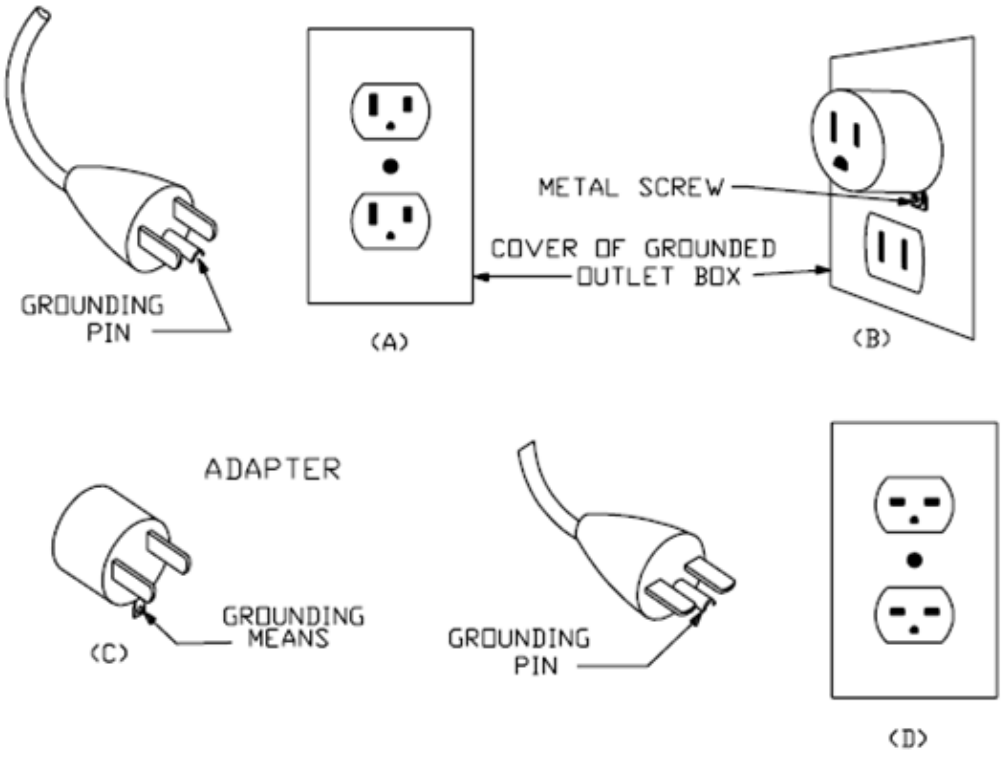

Antari®
FOG MACHINE

C08J10000